Self Study Program 890173

The 2018 Atlas Introduction

Tablet Format

Volkswagen

Volkswagen Group of America, LLC
Volkswagen Academy
Printed in U.S.A.
Printed 1/2017

Course Number SSP 890173

Table of Contents

Introduction

2018 Atlas Product Features

The Atlas is a 7-passenger SUV designed for the North American market and targeted towards families. The Atlas appears very substantial, yet still follows Volkswagen's design philosophy of "simplicity and precision." One primary focus was on function, including a third row of seats that are easy to access and can comfortably accommodate adults. The chassis for the Atlas is Volkswagen's Modular Transverse Matrix (MQB) flexible vehicle architecture.

This SSP will introduce you to the highlights of the 2018 Atlas.

- Blind Spot Monitor
- Park Assist
- Lane Assist
- Adaptive Cruise Control
- 8-Speed Automatic Transmission
- Panoramic Sunroof
- LED Taillamps
- Four Driving Modes
- Car-Net
- Rear Traffic Alert
- Virtual Instrument Cluster
- LED Headlamps
- Three Seating Rows
- MIB II Infotainment System

Not all features listed are standard equipment.

For more information on the Modular Transverse Matrix (MQB) Chassis Concept, please read SSP 890243, the 2015 Golf Design and Function.

Body

2018 Atlas Distinguishing Features

Headlamp Design/ LED Headlamps

Taillamp Design

Body

Technical Data

Exterior Dimensions and Weights

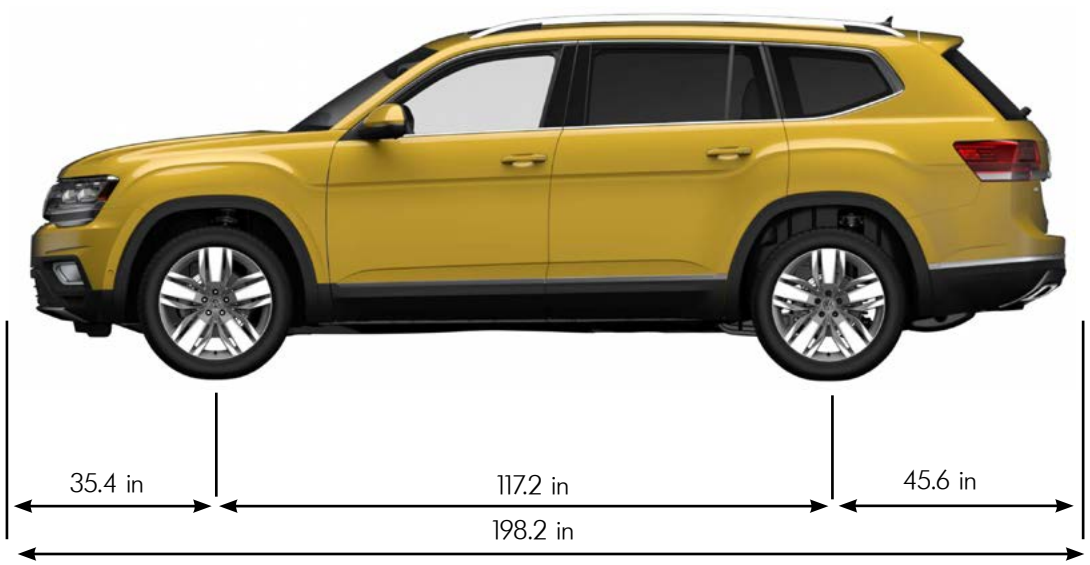

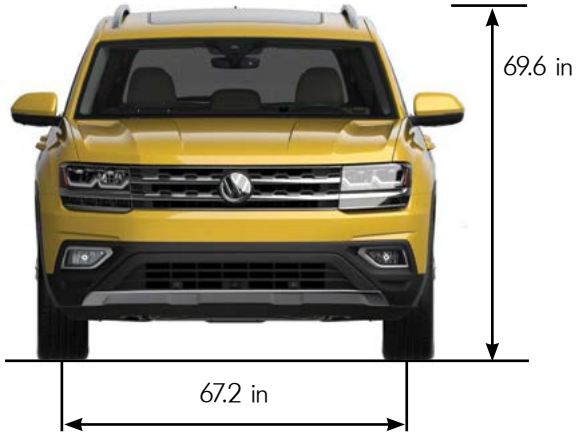

Exterior Dimensions

Length	198.2 in
Width	77.9 in
Height	69.6 in
Wheelbase	117.2 in
Overall width	88.5
Track width at front	67.2 in
Track width at rear	67.8 in

Weights/Details

Curb weight	4221 - 4556 lb
Gross vehicle weight	5621 - 5997 lb
Maximum roof load	200 lb
Tank capacity	18.6 gal

Panoramic Sunroof

The optional Panoramic Tilting/Sliding Sunroof is a two-piece large glass opening system that is 4.46 ft. (1360 mm) long and 2.85 ft (870 mm) wide. The front glass element will tilt and open, and the rear glass is stationary.

An electronically-controlled sunshade helps to control light and heat from the sun.

Operation:

- Pressing up on the sunroof switch once moves the sunroof to the vent position (raised 1.2 in (31mm))
- Pressing the sunroof switch back once moves the glass element almost to the fully-open position (anti-buffeting position).
- Pressing the button again moves the front glass to the completely open position.
- The glass can be moved to any distance between fully opened and fully closed using the sunroof switch.
- When the roof panel is opened, an integrated wind deflector rises from the front edge to minimize wind noise.

Seat Configuration

The Atlas is the first Volkswagen SUV with 3rd row seating. It's available in 6-person and 7-person configurations. Multiple configurations add flexibility to the seating, loading and cargo needs.

The middle bench and third row seats can fold flat for additional cargo space.

Lower Anchors and Tethers for Children (LATCH) and Top Tethers

- The center bench row has three LATCH mounts - one at each seating position
- The center captain's chairs have two LATCH mounts - one at each seating position
- The third row has Top Tethers

Seat Heating and Ventilation (optional)

- The front seats can be heated and ventilated
- The center row outboard seats can be heated
- The center row captain's chairs can be heated

60/40 Bench Center Row

Captain Chairs for Center Row

Sliding and Tilting Seats

The middle row of the Atlas is available with a bench seat that slides forward and backwards, and can tilt for easy entry into the third row. The center row seats are a 60/40 split, and both sections can be folded, slid and tilted independently. Multiple configurations are shown below.

Body

The captain chairs tilt up and forward for ease of access to the third row seats (not shown).

Sliding

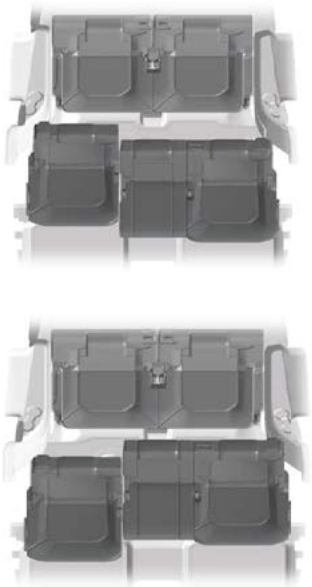

Folding

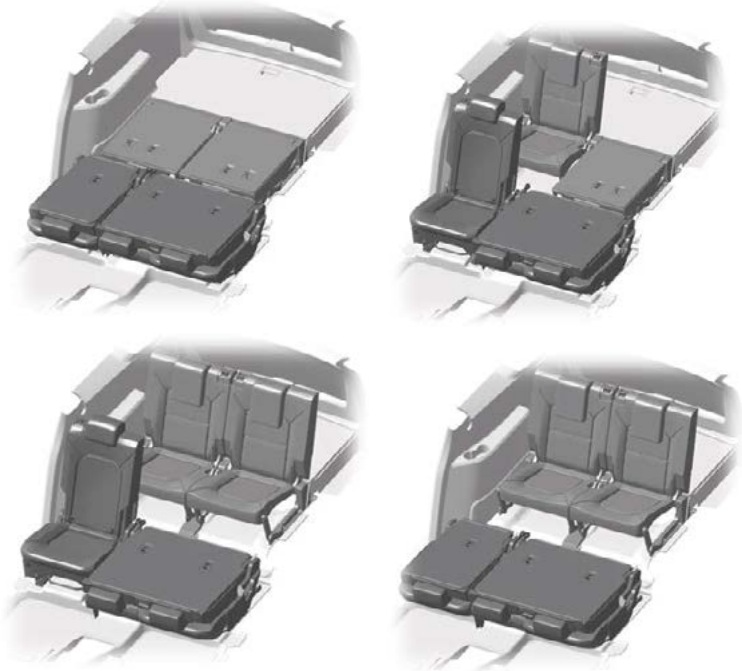

Tilting

Body

Cargo Capacity

The Atlas has substantial cargo capacity, especially since the back two rows of seats fold completely flat.

All rows of seats upright:

Cargo space = 20.6 ft^3 (0.6 m^3)

Third row of seats folded flat:

Cargo space = 55.5 ft^3 (1.6 m^3)

Second and third rows of seats folded flat:

Cargo space = 96.8 ft^3 (2.7 m^3)

Storage Compartments

There are numerous storage compartments in the new Atlas. There are storage options for every seating position.

Glove Box

Open Compartment in Center of Instrument Panel

In Front of Shifter Lever

Lower Instrument Panel, Left of Steering Wheel

Jumbo Box

Front Cupholders

Body

Storage Compartments continued...

Front Doors, with 1-Liter Bottle Holder

Rear Doors with Cupholder and Two Storage Areas

Left 3rd Row Area with Cupholders and Two Storage Areas

Three Cupholders in Armrest (Rear Bench Seat)

Right 3rd Row Area with Cupholders and Tablet Holder

Luggage Compartment with Multiple Storage Areas, Luggage Cover Storage and Side Storage Areas

Body

Memory Seats

The driver's 10-way power seat is available with seat position memory. The driver profiles can be accessed through the MIB Infotainment System.

Towing

All Atlas vehicles will have the capability to tow a trailer. The base towing capability of the Atlas is approximately 2,000 lbs*. When the towing package is installed on the 3.6L Atlas, the towing capability is boosted to approximately 5,000 lbs. Always check the Owner's Manual for the specific towing capabilities for the vehicle.

If the vehicle is equipped with the towing package, a trailer brake wire will be pre-wired from the trailer control module in the rear up to the front of the vehicle. The front end is located under the driver's side carpet.

2.0L TSI Engine

The 2.0L TSI engine is an EA888 engine design.

Technical Features

- Cylinder head with integrated exhaust manifold
- Roller bearing balance shafts
- Smaller crankshaft main bearings with only four counterweights
- Turbocharger with electrical wastegate flap actuation
- Reduced oil pressure
- Sump with upper aluminum section and lower plastic section
- Accessory bracket with integrated oil filter and oil cooler

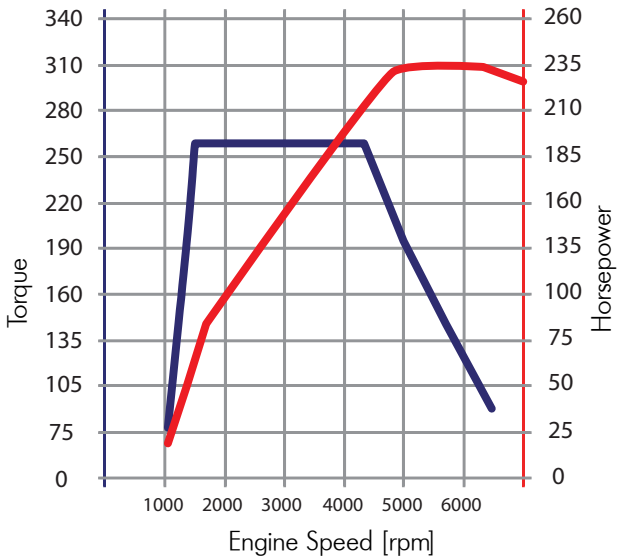

Displacement	1984 cm^3
Bore	82.5 mm
Stroke	92.8 mm
Valves Per Cylinder	4
Compression Ratio	9.6:1
Horsepower	175 kW (235 hp) from 4,500 to 6,200 rpm
Torque	349 Nm (258 lb/ft) from 1,600 to 4,400 rpm
Engine Management	SIMOS 18.1
Fuel	87 Octane
Emission Treatment	Three-way catalytic converter, one upstream broadband lambda probe of the turbocharger and one step-type lambda probe downstream of the catalytic converter
Emission Standard	LEV 3

3.6L FSI Engine

The 3.6L FSI engine with 4-valves per cylinder is based on the VR engine series.

Technical features

- Optimized for lower oil pressures
- Non-engaged chain tensioner
- One-part oil pump chain sprocket
- Exhaust camshaft adjuster with 32° setting range
- Vibration damper secured with 7 bolts

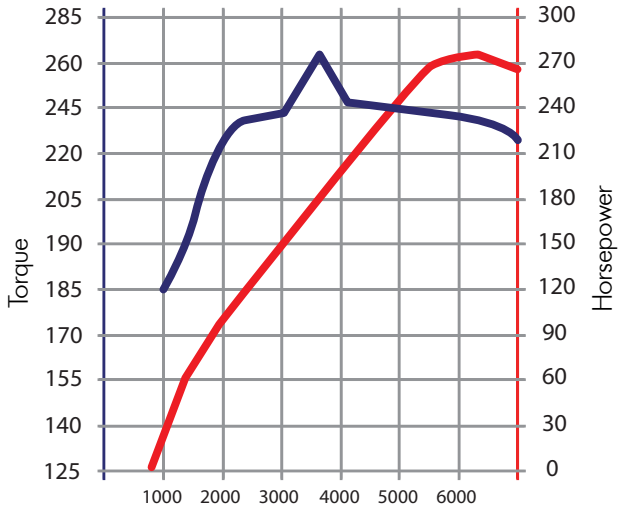

Type	6-cylinder in-line engine
Displacement	219.5 in^3 (3597 cm^3)
Bore	3.5 in (89 mm)
Stroke	3.8 in (96.4 mm)
Valves Per Cylinder	4
Compression Ratio	11.4:1
Maximum Output	276 hp (206kW) at 6200 rpm
Maximum Torque	266 lb/ft (360Nm) at 2750 rpm
Engine Management	Bosch Motronic MED 17.1.62
Fuel	87 Octane
Exhaust Gas Treatment	Three-way catalytic converter with lambda control
Emissions Standard	LEV 3

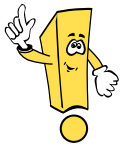

Additional information on this engine is available in SSP 823603, the 3.2L and 3.6L Engines.

Engines and Transmissions

Transmission Type	Technical Data
8-Speed Automatic Transmission 09P	The 09P (AQ450) 8-speed automatic transmission is the only transmission used in the Atlas. It is available as both a two- and four-wheel drive configuration. The 2.0L engine will only be available in two-wheel drive. The 3.6L engine will be available as both two- and four-wheel drive. This transmission is based on the Aisin 09G transmission, but incorporates a different design and components, such as: • Additional planetary gearsets • Additional hold and drive components • A different valve body • An Electro-Magnetic Oil Pump (EMOP) solenoid to keep the 1st gear C1 clutch engaged during Start-Stop operation, ensuring a smooth transition from a stopped engine to takeoff This transmission has the same final drive ratio as the 09G/M transmission.

All-Wheel Drive System

The Atlas has available all-wheel drive on some models. This system has a different version of the AQ450 automatic transmission that provides output to the rear wheels.

Driving Modes

The driving mode selection capability is only available on All-Wheel Drive Atlas vehicles. This allows the customer to switch between:

- Snow
- On-Road
- Off-Road
- Custom Off-Road

Each of these modes has different engine, transmission, steering, and ACC settings.

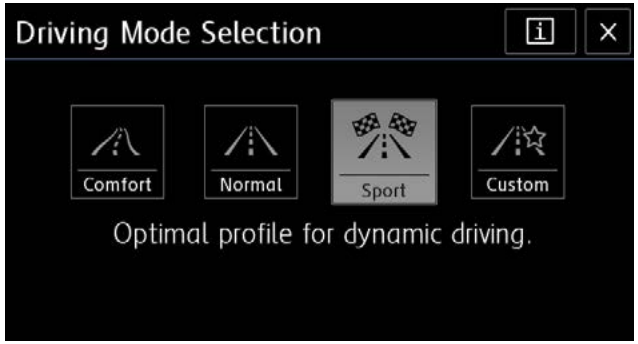

On-Road Setting

The On-Road setting is the default driving mode. When the On-Road setting is selected, the driver can choose any of the following modes using the infotainment system:

- Eco Mode - a low consumption mode, affecting the HVAC and ACC systems. This mode is not available when towing.
- Normal Mode - Balanced settings for everyday driving
- Sport Mode - Reduces power steering assist and puts the ACC system into sport mode. Engine response is more direct and transmission shift points are changed.
- Custom Mode - Allows you to select the following settings:
  - Steering - Normal or Sport
  - Drive System - Normal, Sport or Eco
  - ACC - Normal, Sport or Eco
  - Climate Control - Normal or Eco

Snow Setting

- Activates the 4Motion AWD system to provide better acceleration on icy or snow covered roads and to improves lane holding when cornering
- The ACC function is restricted
- The Sport selector lever position will not function in this mode
- The Snow Mode presets cannot be changed:
  - Steering - Sport
  - Drive System - Snow
  - ACC - Eco
  - Climate Control - Normal

Off-Road Setting

The Off-Road Setting is used when driving on loose surfaces off of normal pavement.

- Provides greater acceleration sensitivity.
- Gears are held to assist with engine braking
- The Hill Start Assist and Hill Descent Control are active
- Sport Mode cannot be activated in Offroad Mode
- The Off-Road Settings cannot be changed:
  - Steering: Normal
  - Drive System: Offroad
  - ACC: Normal
  - AWD: Offroad
  - Hill Hold Assist: ON
  - Hill Descent Control: ON
  - Park Assist: ON
  - Climate Control: Normal

Custom Off-Road Setting

- Allows customization of the Offroad Mode settings through the Infotainment System:
  - Steering: Normal or Sport
  - Drive System: Normal or Sport
  - ACC: Normal, Sport or Eco
  - AWD: Normal or Offroad
  - Hill Hold Assist: ON or OFF
  - Hill Descent Control: ON or OFF
  - Park Assist: ON or OFF
  - Climate Control: Normal or Eco
  - Reset: Returns all above settings to the default settings

Driver Assistance Systems at a Glance

The Atlas has a wide array of driver assistance systems. This SSP will provide a short overview of these systems.

Driver Assistance Systems:

- Front Assist with Autonomous Emergency Braking
- Adaptive Cruise Control (ACC)
- Lane Assist (Lane Departure Warning)
- Blind Spot Monitoring
- Rear Traffic Alert
- Park Distance Control
- Park Assist (Automatic Parking Assistant)

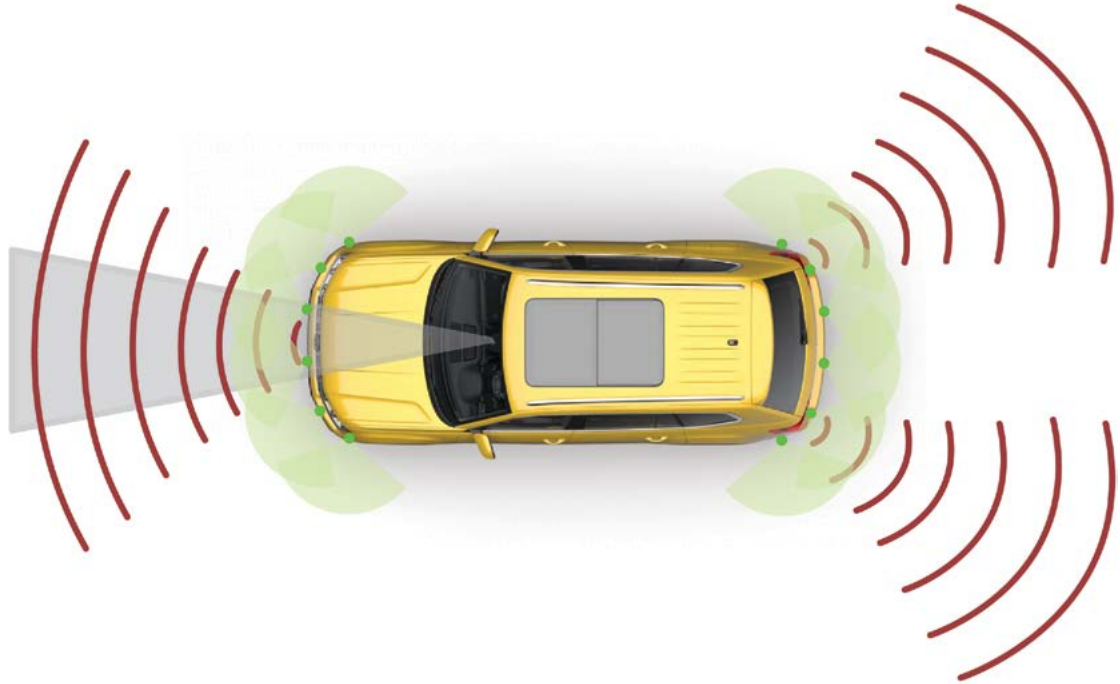

None of these Driver Assistance systems are designed to relieve the driver of any driving responsibilities!

These systems are described in greater detail in SSP 890253, Volkswagen Driver Assistance Systems

Front Assist Overview

The Forward Collision Warning system is designed to alert the driver when a possible impact is detected. A radar sensor in the front bumper is used to detect the distance between vehicles.

The Front Assist system not only alerts the driver audibly and visually, but also has the capability to apply the brakes. The warning and brake applications occur in four stages:

1. Visual and acoustic warning. Brake system prefills in preparation for braking
2. Brake jolt to further alert driver
3. Advanced automatic partial braking
4. Full braking to avoid a collision

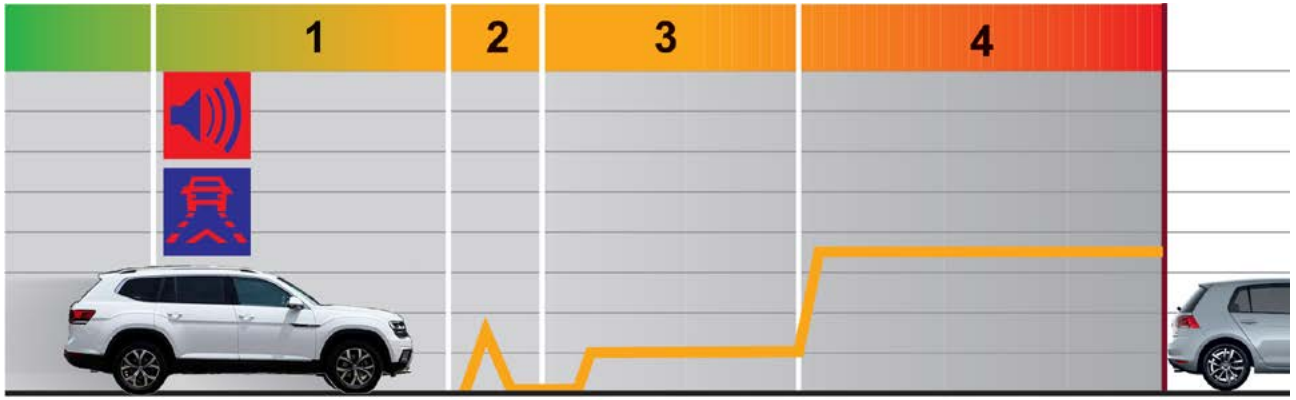

Adaptive Cruise Control Overview

The Adaptive Cruise Control (ACC) system is designed to enhance the cruise control system by altering the vehicle speed to match the pace of traffic. When there is no traffic, the vehicle will maintain a preset speed, just like cruise control. If the ACC vehicle comes up on a slower vehicle, ACC will automatically match the speed of the slower vehicle and follow at a preset following distance. When the vehicle ahead is no longer there, ACC will speed up to maintain the preset speed.

A radar sensor located at the front of the vehicle is constantly scanning to detect objects or vehicles ahead. The ACC multifunction steering wheel controls or stalk on the steering column allow for activation, deactivation and setting a preferred distance to the vehicle ahead.

The ACC system on the Alas is designed to bring the vehicle to a complete stop if necessary. If this happens, the only thing the driver needs to do to continue ACC operation is tap the accelerator pedal.

Lane Assist Overview

The Lane Assist system on the Atlas can both warn the driver and provide turning resistance for the steering wheel.

The front camera at the base of the rearview mirror is constantly scanning the road ahead for lane markings. It processes these lane markings with other signals to determine if the vehicle is staying in the lane or leaving the lane.

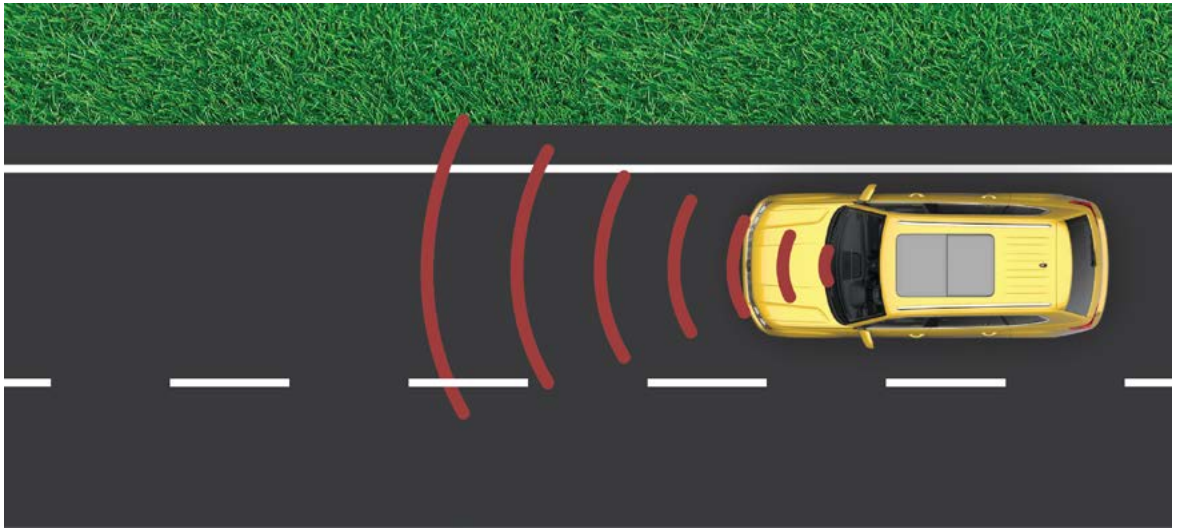

If the vehicle seems likely to leave the lane without driver input, the system automatically counteracts the steering to keep the vehicle in the lane. This countersteering is continual and gentle. However, it can be overridden by the driver at any time with relative ease.

Also, if the driver attempts to leave the lane without a turn signal, the system will provide resistance to the steering wheel. If a turn signal is used, no resistance will be applied.

Blind Spot Monitoring

The Bind Spot Monitoring system uses radar sensors at the rear of the vehicle to continually scan for traffic next to and behind the vehicle. It warns the driver when a vehicle is in a "blind spot," helping to avoid accidents.

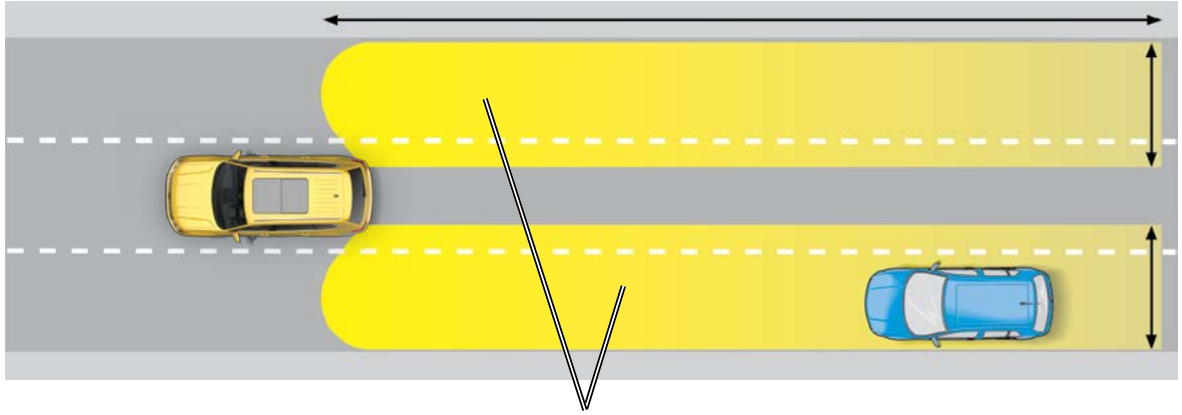

Detection Areas

The system has an information stage and a warning stage. If the system detects a potential risk without a lane change being indicated (turn signal not activated), the driver is informed by the warning lamp in the corresponding exterior mirror housing.

The warning stage is activated if there is a potentially hazardous situation and the driver indicates a lane change by using the corresponding turn signal.

Rear Traffic Alert Overview

The rear radar sensors used for Blind Spot Monitoring are also used for Rear Traffic Alert. Rear Traffic Alert warns of approaching vehicles when backing out of a parking spot.

The radar sensors measure the distance and the speed difference between your vehicle and an approaching object and uses this to calculate the time until a possible collision.

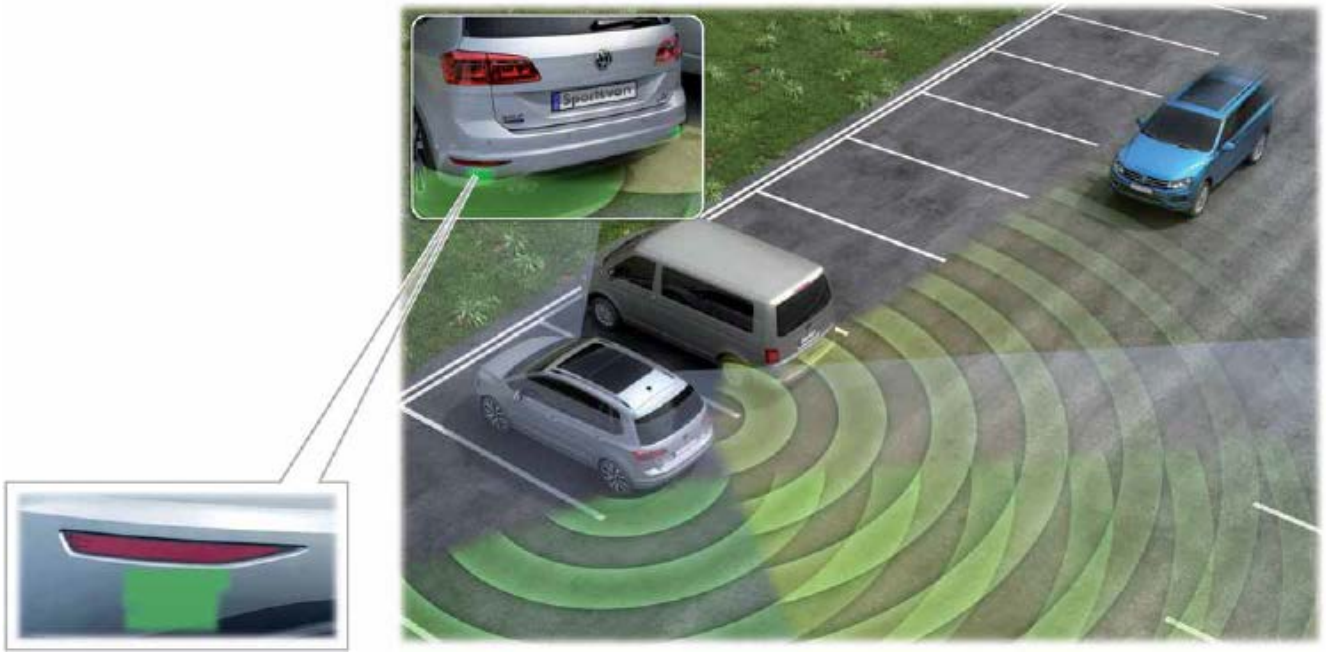

Park Distance Control 360° Overview

Park Distance Control (PDC) uses ultrasonic sensors to alert the driver of objects in front of and behind the vehicle when parking or backing up. In this section we will discuss the system that has 360° visibility.

The 360° PDC monitors and displays the front, rear and sides of the vehicle.

The Infotainment display of the side areas is calculated from the PDC sensors because their scanning does not include the vehicle sides. Objects that appear on the sides are remembered from the front or rear sensors, and move along the side based on driving direction, steering angle and the ABS system (distance).

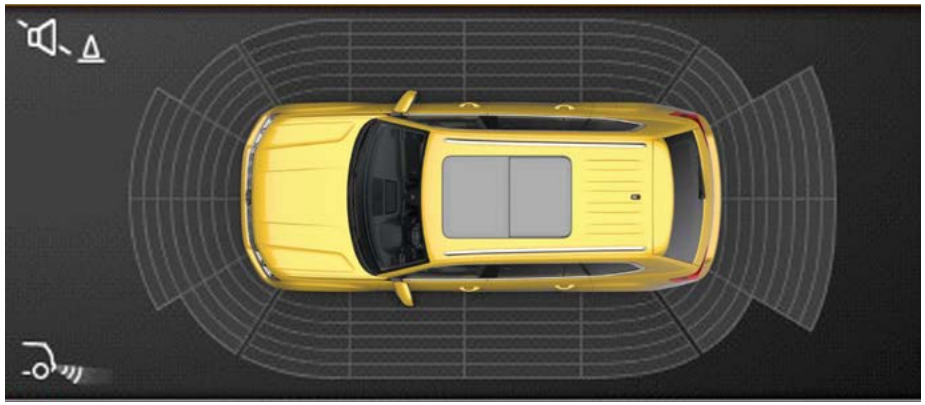

Park Assist Overview

Park Assist helps the driver to park a vehicle in parallel or perpendicular parking spots. It controls the vehicle steering while the driver must control the accelerator and brake inputs.

This semi-automatic parking system allows for perpendicular parking (spaces 90° to the lane) and parallel parking on the right or left of the lane. It will not only park the vehicle, but can also be used to get the vehicle out of parking spots.

Parking Distance Control (PDC) sensors sense the vehicle and open areas. This system has six sensors, just like the PDC 360° system. These side sensors are used to detect open spaces when the system is active.

The sensor information, vehicle speed from the ABS Control Module and the steering angle are used to calculate the location of an open spot relative to the vehicle. When a spot is detected, the system will automatically choose either parallel or perpendicular, depending on what it thinks is best.. You can change this choice by pressing the Park Assist button.

Parallel Parking

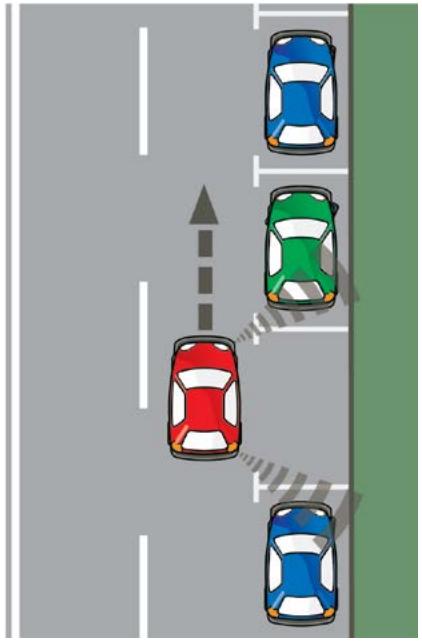

The Parallel Parking specifications are:

- Vehicle length plus,
- Extra space of at least 1.3 ft (0.4 m) at both the front and rear for maneuvering and safety
- Maximum speed of 25 mph (40 km/h)

Perpendicular Parking

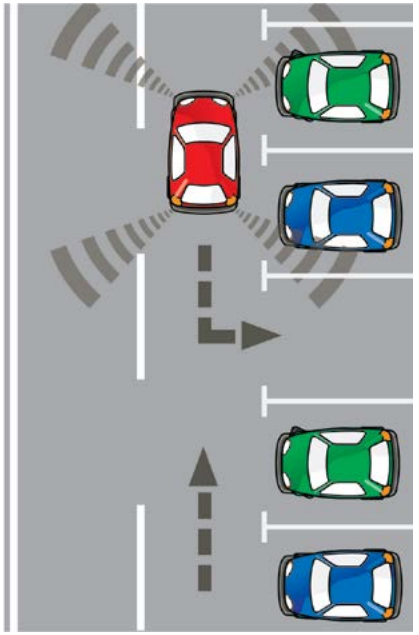

The Perpendicular Parking specifications are:

- Vehicle width plus,
- Extra space of at least 1.1 ft (0.35 m) for maneuvering and safety
- Maximum speed of 25 mph (40 km/h)

Electrical Components

Depending on the equipment level, the 2018 Atlas has an alternator with either a 150 A or 180 A output. The
180 A alternator is installed with the factory-installed towing package. The alternator load is controlled by the Data Onboard Diagnostic Interface J533 using a LIN-Bus network.

The battery is located in the engine compartment for all models.

Electrical Boxes

Three electrical boxes/fuse holders distribute electricity in the vehicle:

- SA - Located on top of the battery. Contains larger, higher voltage supply cables
- SB - Located on the left side of the engine compartment. Contains fuses and relays
- SC - Located at the bottom left of the instrument panel. Contains relays and fuses

To find out the precise location of various fuses and relays, please refer to the relevant wiring diagram in ElsaPro.

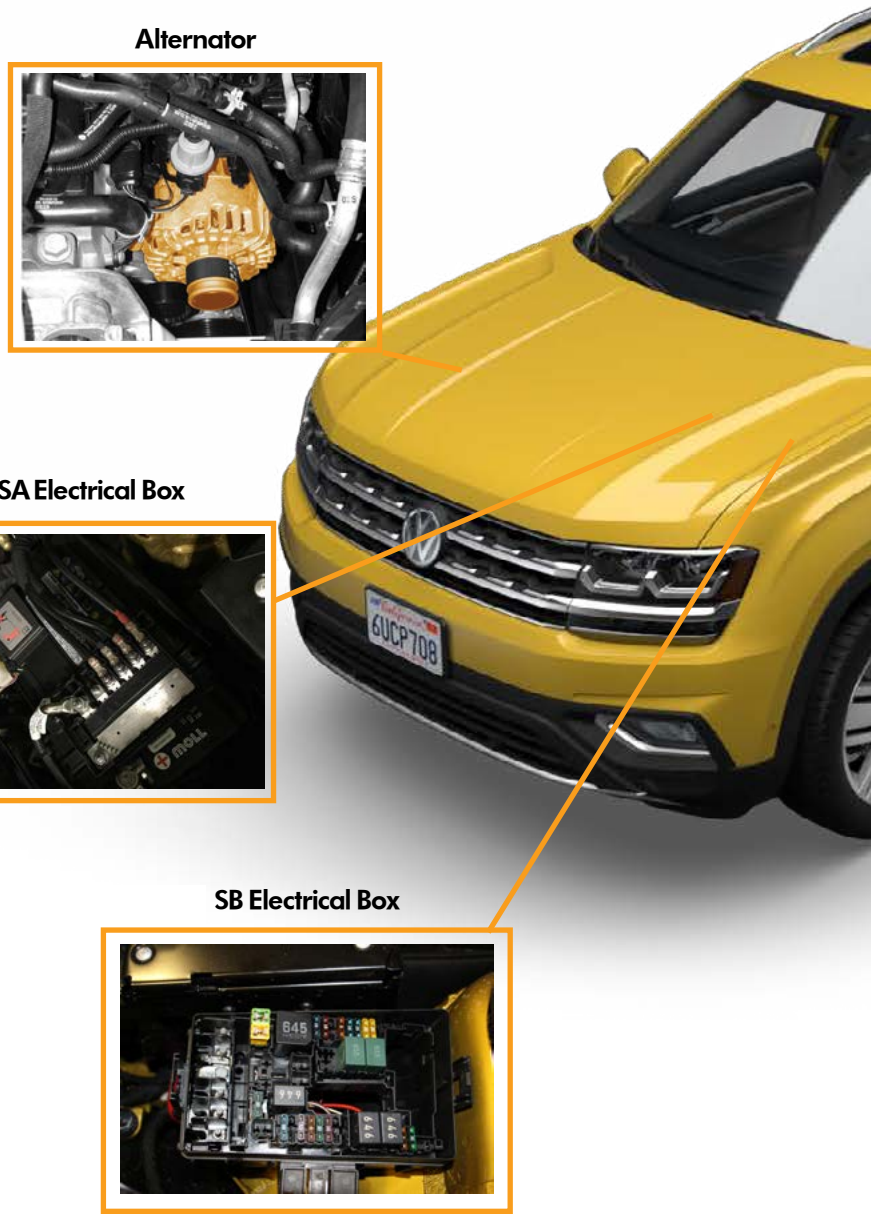

Electrical Systems

Electrical Components continued...

Relay and Fuse Holder SC at the Bottom Left of the Instrument Panel

Front Headlights

The front headlights have multiple LED components:

- Main beams
- High beams
- Daytime running lights
- Turn signal (orange)

The front headlights have a 640 lumen output

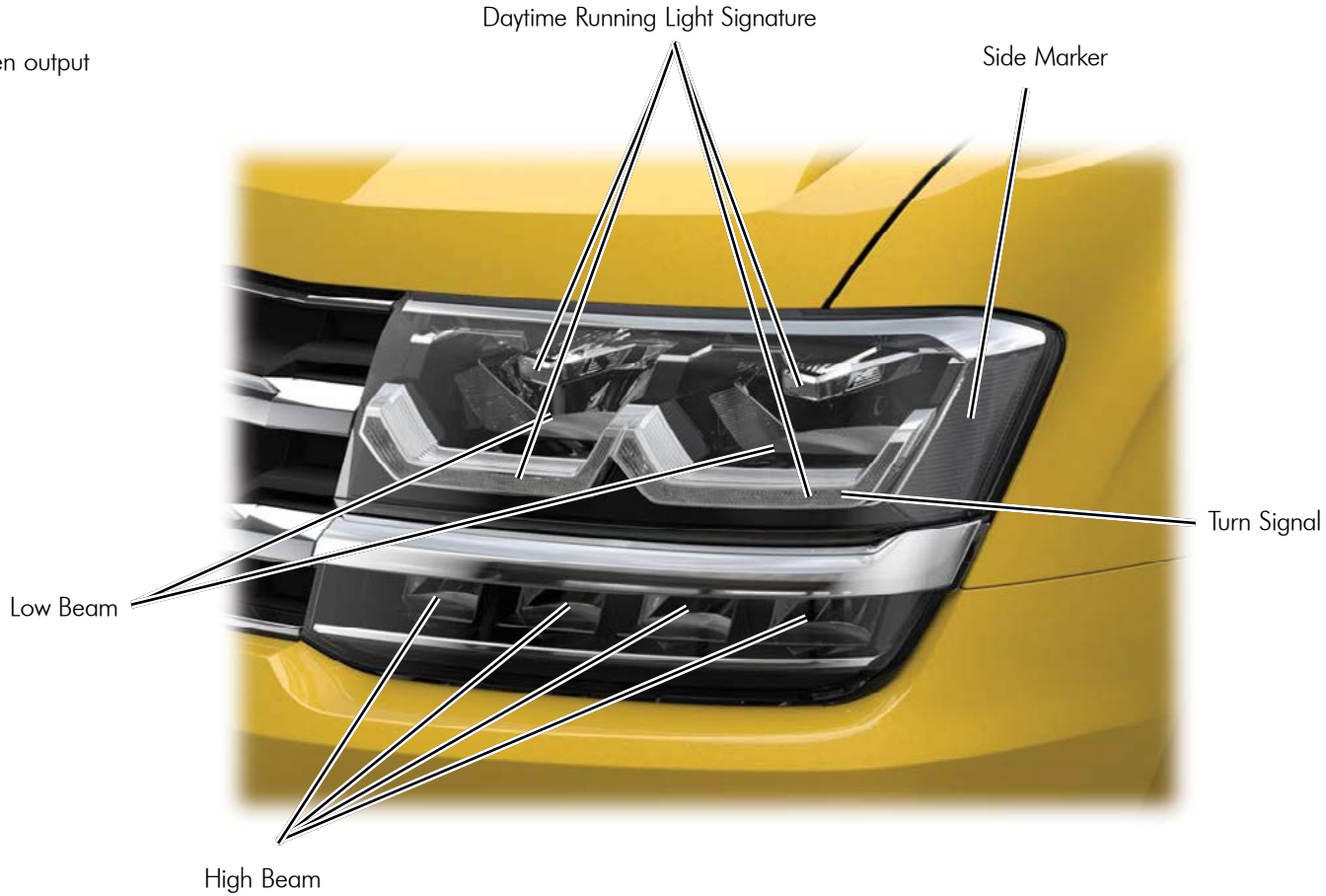

Rear Taillamps

The taillamps have a combination of LED and incandescent components:

- Brake lamp and running lamp (Incandescent, LED for SEL Premium)
- Side marker lamp (LED for all)
- Reverse lamp (Incandescent, LED for SEL Premium)
- Turn signal lamp (orange bulb, incandescent for all)

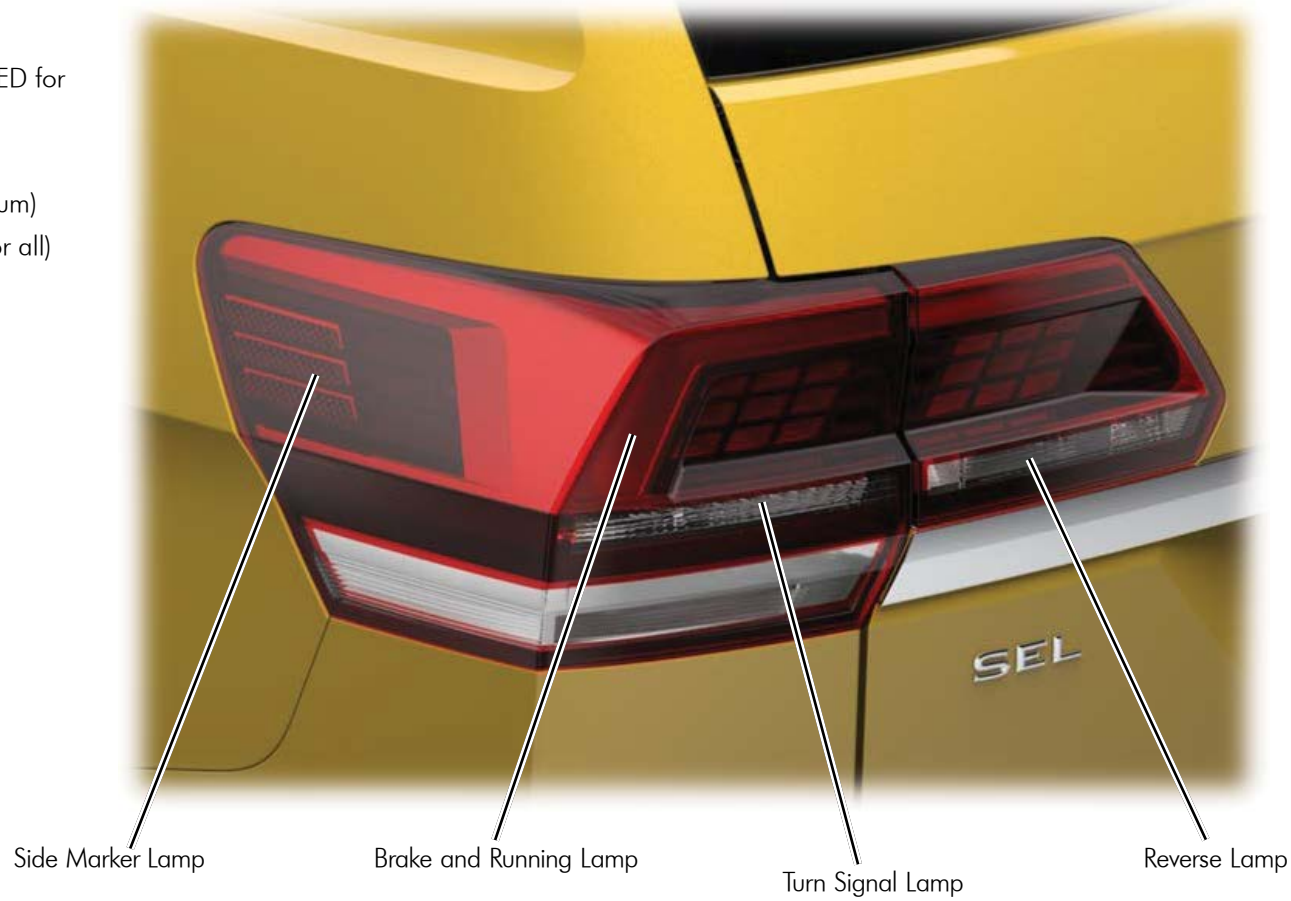

Ambient Lighting

The Atlas has extensive interior ambient lighting in the front seats that functions both as a functional and design element. The brightness can be controlled using the MIB dimming function.

Functional:

- Interior and reading lights (halogen)
- Vanity mirrors (halogen)
- Footwell illumination (halogen)
- 1st seat warning lights in front doors (optional)
- Luggage compartment illumination (halogen, optional)

Ambient:

- Dashboard illumination (LED)
- Front door illumination (LED)
- Cup holder illumination (LED)

Network design

The Atlas CAN-Bus system is based on the MQB CAN-Bus systems. All CAN-Busses communicate at 500K.

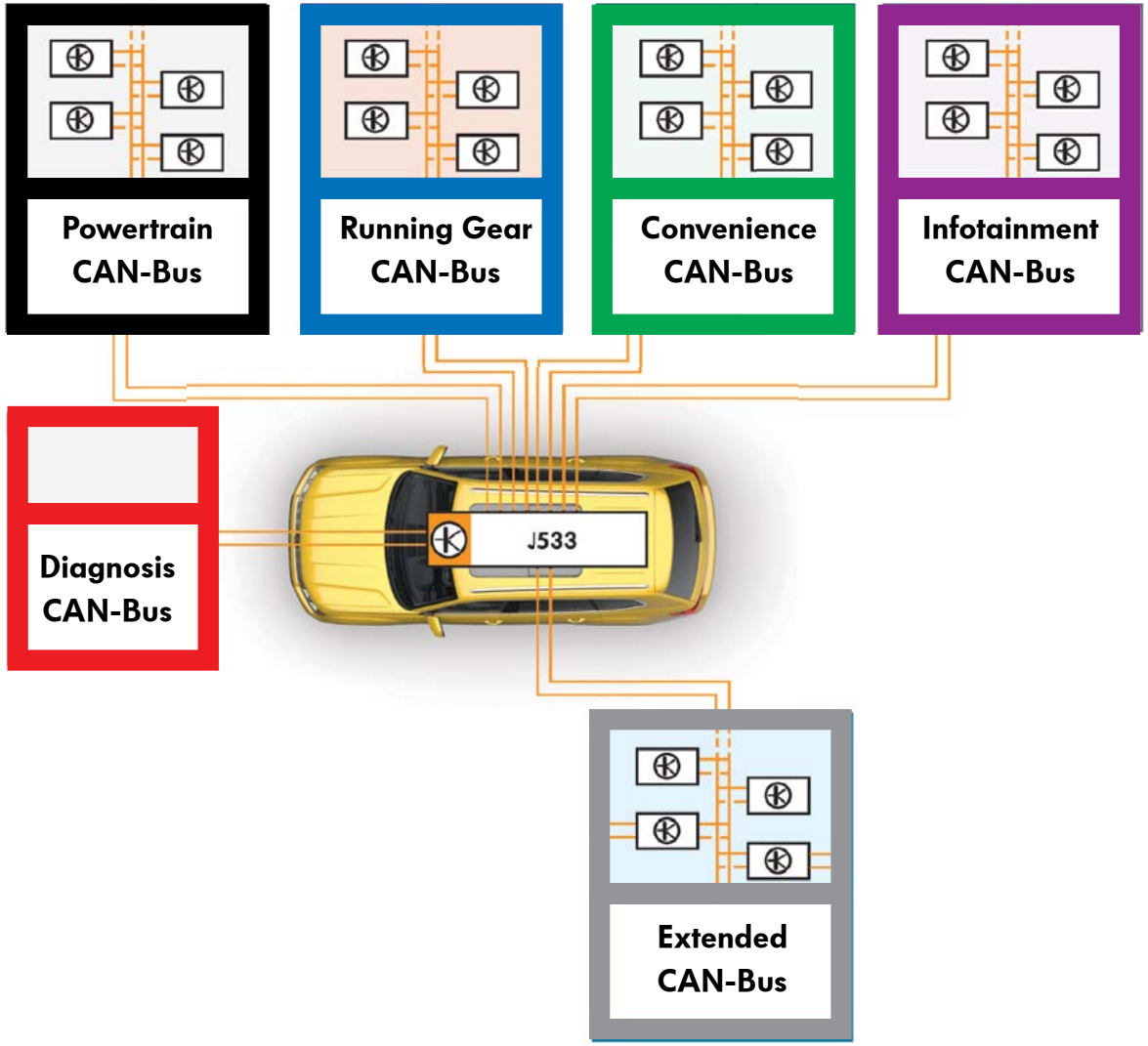

The CAN-Buses

Powertrain CAN-Bus

The Powertrain CAN-Bus has changed slightly when compared to other Volkswagen vehicles. The Power Steering Control Module J500 has moved from the Powertrain CAN-Bus to the Running Gear CAN-Bus. There are also two NOx sensors connected to the J623 Engine Control Module.

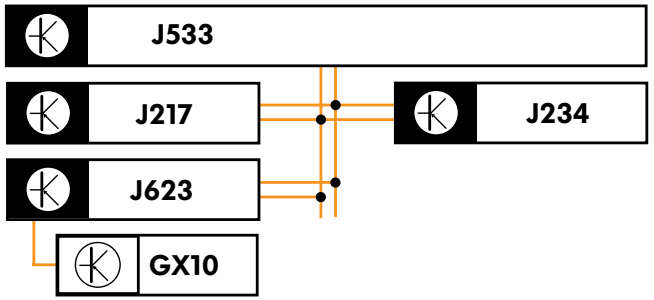

Key

J217 Transmission Control Module
J234 Airbag Control Module
J533 Data Bus Onboard Diagnostic Interface
J623 Engine Control Module
GX10 Oxygen Sensor Before Catalytic Converter

Infotainment CAN-Bus

The Infotainment CAN-Bus is very similar to other Volkswagen MQB CAN-Busses. However, there is a MOST-Bus that connects some control modules for video display transfer.

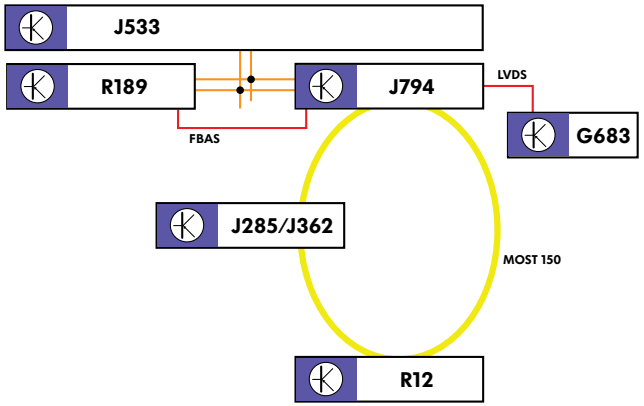

Key

G683 Front Information Display Control Head
J285 Instrument Cluster Control Module
J362 Anti-Theft Immobilizer Control Module
J794 Information Electronics Control Module
J533 Data Bus Inboard Diagnostic Interface
R12 Amplifier
R189 Rearview Camera
FBAS Color Video Blanking Signal
LVDS Low Voltage Differential Signalling

Running Gear CAN-Bus

Volkswagen's Running Gear CAN-Busses continue to grow as more driver's assistance modules are added to the vehicles. In addition, this CAN-Bus has some influence over the headlamps and cornering lamps. J745 is connected to both the Running Gear CAN-Bus and the Comfort and Convenience CAN-Bus for different functions.

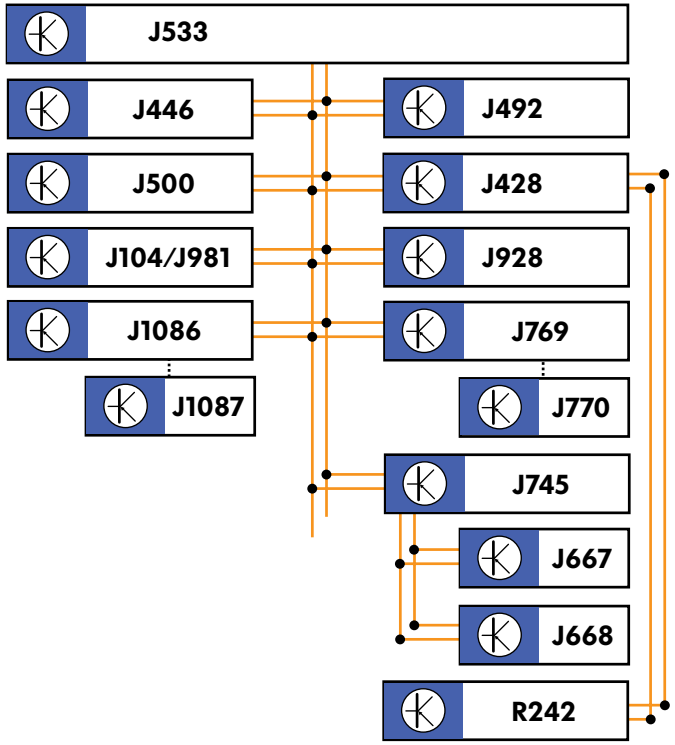

Key

J104 ABS Control Module
J428 Distance Regulation Control Module
J446 Parking Aid Control Module
J492 All Wheel Drive Control Module
J500 Power Steering Control Module
J533 Data Bus Onboard Diagnostic Interface
J667 Left Headlamp Power Output Module
J668 Right Headlamp Power Output Module
J745 Cornering Lamp and Headlight Range Control Module
J769 Lane Change Assistance Control Module
J770 Lane Change Assistance Control Module 2
J928 Peripheral Camera Control Module
J981 ESC Control Module
J1086 Blind Spot Detection Control Module
J1087 Blind Spot Detection Control Module 2
R242 Driver Assistance Systems Front Camera

J533 LIN-Bus

The Data Bus Onboard Diagnostic Interface (Gateway) has several components directly connected ti it via LIN-Bus: J533 acts as the load management and controls the alternator charging via LIN-Bus.

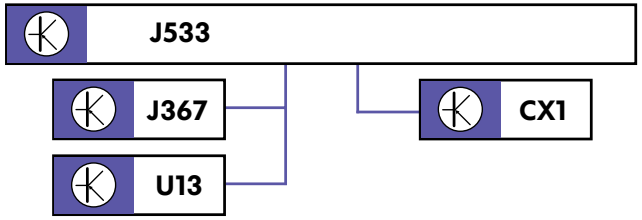

Key

CX1 Generator
J367 Battery Manager Control Module
J533 Data Bus Onboard Diagnostic Interface
U13 Converter with Socket

Extended CAN-Bus

The Extended CAN-Bus contains some lighting and driver assistance systems. In addition, some of these components have private communication CAN-Busses and are also connected to other CAN-Busses in the vehicle.

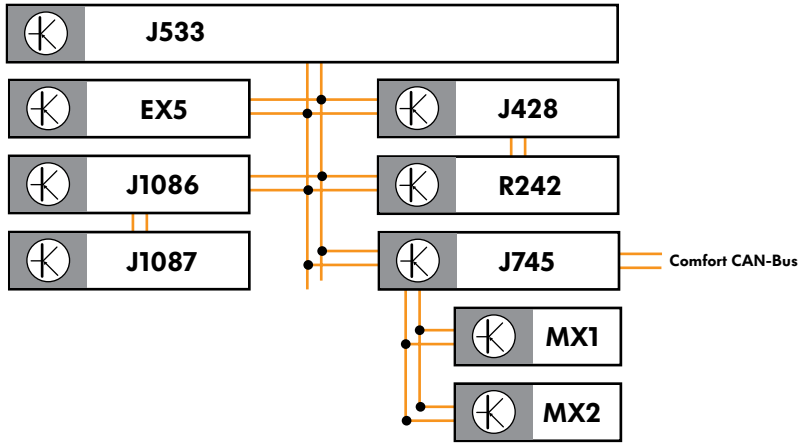

Key

EX5 Interior Rearview Mirror
J428 Distance Regulation Control Module
J533 Data Bus Onboard Diagnostic Interface
J745 Cornering Lamp and Headlamp Range Control Module
J1086 Blind Spot Detection Control Module
J1087 Blind Spot Detection Control Module 2
MX1 Left Front Headlamp
MX2 Right Front Headlamp
R242 Driver Assistance Systems Front Camera

Convenience CAN-Bus

The Convenience CAN-Bus is the most extensive CAN-Bus on the Atlas. Some additions are the towing control module, windshield washer fluid sensor, Car-Net control module and seat fans.

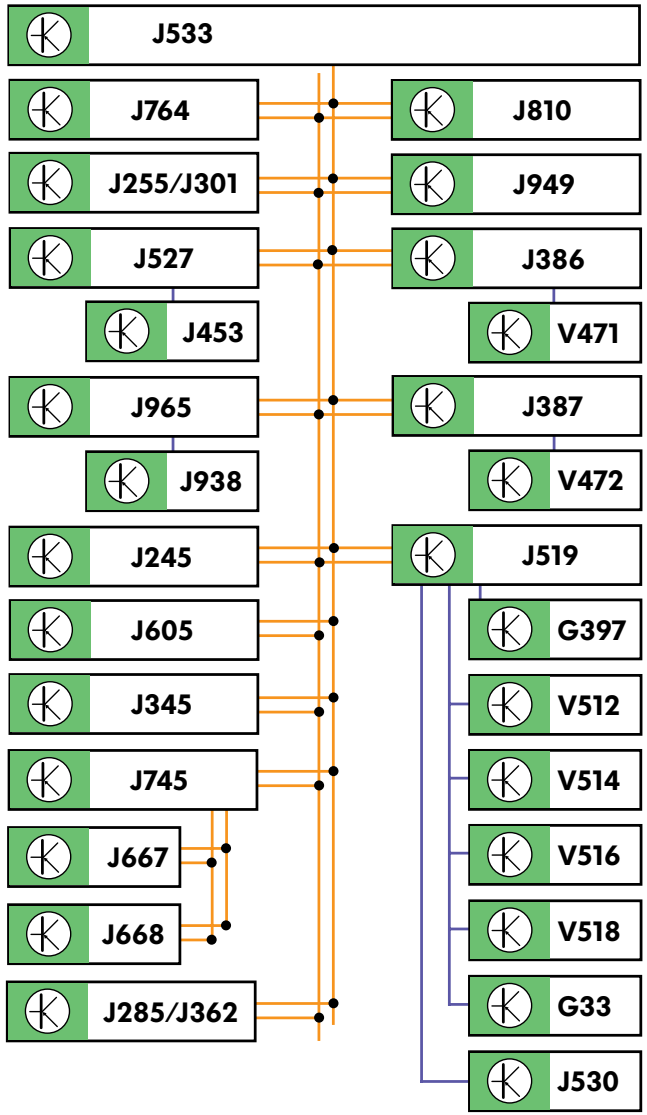

Key

G33 Windshield Washer Fluid Level Sensor
G397 Rain/Light Recognition Sensor
J245 Power Sunroof Control Module
J255 Climatronic Control Module
J285 Instrument Cluster Control Module
J301 A/C Control Module
J345 Towing Recognition Control Module
J362 Anti-Theft Immobilizer Control Module
J386 Driver Door Control Module
J387 Front Passenger Door Control Module
J453 Multifunction Steering Wheel Control Module
J519 Vehicle Electrical System Control Module
J527 Steering Column Electronics Control Module
J530 Garage Door Opener Control Module
J533 Data Bus Onboard Diagnostic Interface
J605 Rear Lid Control Module
J667 Left Headlamp Power Output Module
J668 Right Headlamp Power Output Module
J745 Cornering Lamp and Headlamp Range Control Module
J764 Electronic Steering Column Lock Control Module
J810 Driver's Seat Adjustment Control Module
J938 Rear Lid Opener Control Module (Virtual Pedal)
J949 Control Module for Emergency Call Module and Communication Unit
J965 Access/Start System Interface
V471 Driver Side Rear Window Regulator Motor
V472 Passenger Side Rear Window Regulator Motor
V512 Left Front Seat Backrest Fan 1
V514 Left Front Seat Cushion Fan 1
V516 Right Front Seat Backrest Fan 1
V518 Right Front Seat Cushion Fan 1

Remote Start

Remote Start Function

Remote start is an option for the Atlas. To activate, press the following buttons within three seconds:

- Locking button once
- Remote Start button twice x2 x2

The indicator lights will give a confirmation flash and the parking lights will remain illuminated while the vehicle is running. If the remote start feature is not interrupted, the engine runs for about 10 minutes. Two remote starts in a row are possible before a start cycle from inside the vehicle is required.

Liftgate

The Atlas has three different liftgate options:

- Manual liftgate with gas struts
- Power liftgate with electronically-controlled struts. This can be controlled by:
  - Button in the driver's door
  - Button on the outside of the liftgate to open
  - Button on the inside of the liftgate to close
  - Button on the keyfob
- Virtual Pedal:
  - This has all of the features of the power liftgate and adds keyless access control, which is described on the next page.

Virtual Pedal

The Virtual Pedal is a function of the KESSY Keyless Access system. Its operation is similar to the Virtual Pedal on other Volkswagen vehicles. The Virtual pedal is only available on vehicles with an electric tailgate.

A person with a vehicle key stands in the center of the rear of the vehicle and sweeps a leg quickly to the bumper and back. The shin bone enters the area of the capacitive sensor.

The Virtual Pedal function is only active if:

- There is an authorized remote control key within 2.9 ft (1.5 m) of the rear of the vehicle
- The speed of the vehicle equals 0 mph
- The ignition (term. 15) is OFF
- The engine is OFF

Function:

The Rear Lid Opener Control Module Sensor J938 in the rear bumper recognizes movement and sends a signal to the Access Start System Inteface Control Module J965. Using the Access/Start System Antenna in Rear Bumper R136 (LF signal with 125 kHz), J965 checks whether there is at least one remote control key in the rear area.

If an authorized key is detected, the 3rd brake light lights up (in the upper area of the rear window) and the rear lid latch releases. This will take place even if the vehicle is locked.

Virtual Instrument Cluster

The 2018 Atlas has an optional instrument cluster that allows the driver to customize the cluster configuration.

The following safety-related warning lamps are still in the form of fixed indicators above the display:

- Turn signals
- Warning lamp for exhaust-related faults
- ABS warning lamp
- Central warning lamp
- Warning lamp for electromechanical power steering faults
- Warning for brake system faults
- Warning for the electromechanical parking brake

The cluster display has the following characteristics:

- 12.3" TFT display with a resolution of 1440 x 540 pixels
- Features all basic functions
- Different displays can be selected
- Automatically changing displays depending on the active function
- Display of 2D and 3D graphics
- Navigation and media display

This Virtual Cluster has the following primary views:

- Vehicle Status
- Driving Data
- Assistance Systems
- Navigation
- Audio
- Views

These screens are accessed using the steering wheel controls. Examples of these screens are provided in the following pages.

Virtual Cluster Design

The Virtual Cluster is connected to the MOST-Bus to display images, animations and navigation maps with little to no delay.

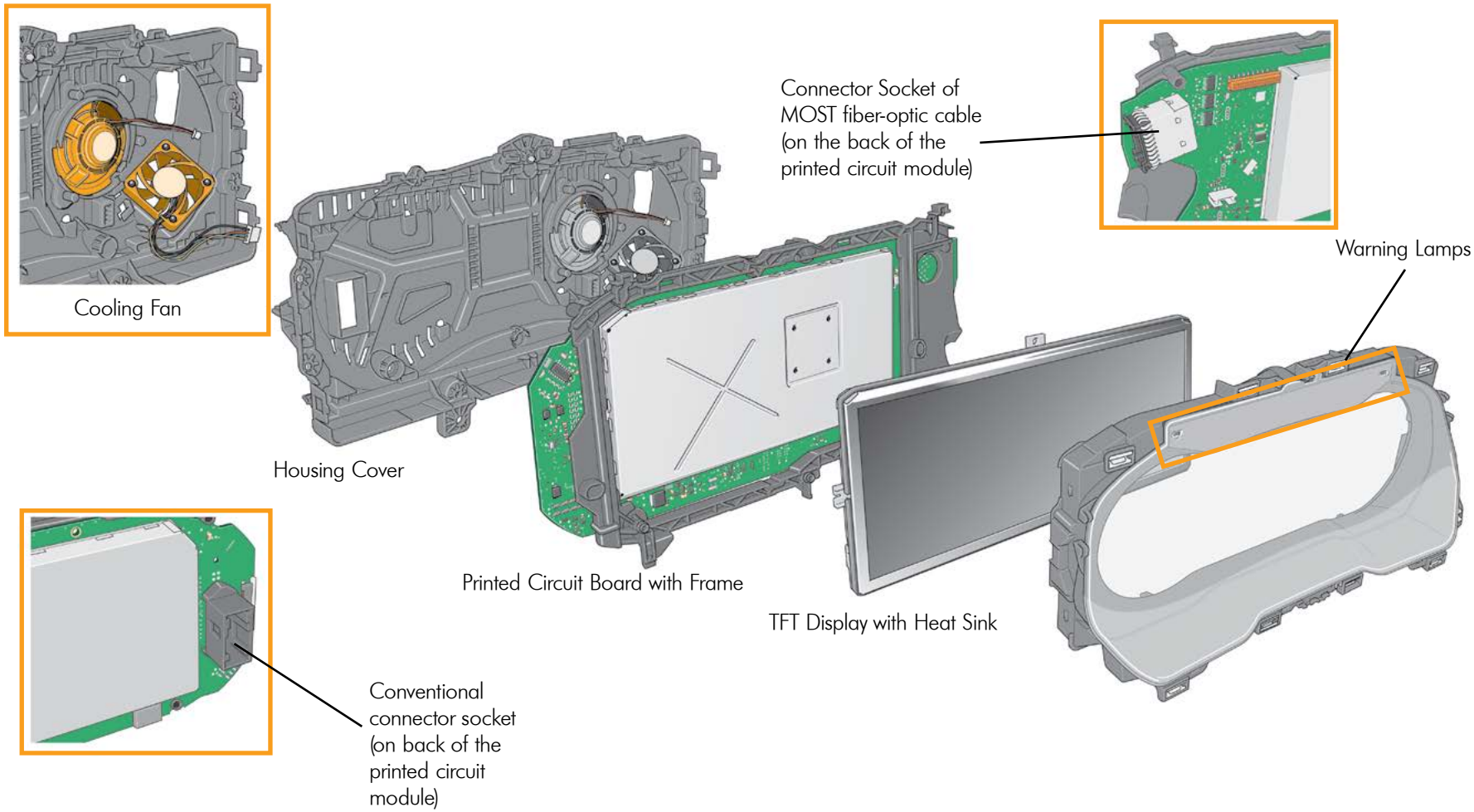

Virtual Cluster Views

Vehicle Status Screen

The Vehicle Status screen displays the current vehicle status.

Driving Data Screens

The Driving Data screens allow the following information to be displayed in the center of the instrument cluster. Some example images are provided below.

- Oil temperature
- Economy
- Average Economy
- Range
- Convenience Consumers
- Travel Time
- Distance
- Average Speed
- Speed Warning

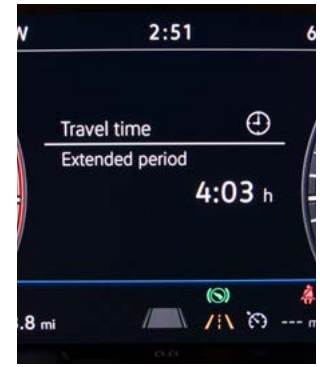

Assist Systems Screen

The Assist Systems screen displays the current status and operation of the Adaptive Cruise Control system. In this image, there are no vehicles ahead.

Audio Screen

The Audio screen displays the current song and source/station information.

Navigation Screens

The navigation map normally displayed on the Infotainment display can be displayed in the center of the instrument cluster. In addition, the tachometer and speedometer dials can be reduced in size to display a larger map.

Using the Navigation menu, select Display Map.

This will transfer the map display from the infotainment display to the instrument cluster when Navigation is being used.

Navigation Screens continued...

To reduce the size of the tachometer and speedometer dials and increase the map size, select Enlarged Map Display.

Enlarged Map Display.

Views Screens

The six Views screens can display additional information in the center of the tachometer and speedometer dials. These can be used in combination with the other display screens on the previous pages. The Views options are displayed below:

Classic View

Gear and Speed

Views Screens continued...

Economy and Range

Economy

Views Screens continued...

Navigation

Driver Assist Systems

Modular Infotainment Matrix (MIB) II

The 2018 Atlas has three different MIB II Infotainment Systems available. These are:

- Composition Color
- Composition Media
- Discover Media

MIB Configuration

There are two MIB configurations in the Atlas. The Composition Color is a single integrated unit.

The Composition Media and Discovery Media have a display in the instrument panel and a control module located in the glove box.

+

G683 Front Information Display Control Head

J794 Control Module for Information Electronics

Composition Color

Technical Features

- 6.5" 800X480 px color resistive touchscreen
- Single integrated unit
- Six side keys for functions
- Single-disc, MP3 compatible CD player
- Eight speakers (4 X 20 Watt output)
- SD card slot in the infotainment interface
- AUX-IN located near USB port in center console
- Front USB input that can control a phone and has charging capability
  - This port is backwards compatible and will charge and import media from iPods, MP3 devices, etc. using the device's USB cable. It operates like the MDI in previous vehicles
  - iPods and other media devices are not integrated into App-Connect and can be accessed through the Media hardkey
  - More USB ports may be available depending on model and trim
- Compatible with Car-Net App-Connect, Security and Service features
- Bluetooth with audio capability (HFP, A2DP, PBAP, AVRCP)
- Double tuner with phase diversity for radio signal reception

Composition Media

Technical Features

All functions of the Composition Color plus:

- 8.0" 800X480 px color resistive touchscreen
- Glass covered panel on infotainment interface
- Swipe and zoom gesture capability
- Eight side keys for functions
- Additional USB Ports (depending on options). These ports provide charging capability and can transfer audio data from the phone to the infotainment system. These ports do not provide smartphone control from the Infotainment system:
  - Center USB input in the center console jumbo box
  - Two USB inputs at the base of the center console for charging only
- (1) SD and (1) CD input in glove box

Discover Media

Technical Features

All functions of the Composition Color plus:

- Navigation functions
- Travel Link information through Sirius XM
- WiFi for Media Control

MIB II Media Inputs

The Atlas has up to five media inputs, depending on trim level and equipment:

- Four USB inputs
- One AUX-IN input

The USB/AUX-IN combination port is located in front of the shifter. This USB port charges, supports audio integration and supports App-Connect.

The remaining three USB inputs are:

- One is located in the jumbo box under the center armrest. This USB port supports data streaming and charging, but not App-Connect
- Two are located at the base of the center console, in the rear. These only support charging

MIB II Media Input Layout

All USB inputs are connected to the USB hub located under the center console. This USB hub communicates with J794, the Information Electronics Control Module 1.

J794 is responsible for:

- Receiving USB information from the USB and AUX-IN ports
- Sending audio and image information through to the Infotainment display and the Virtual Cluster (if equipped)

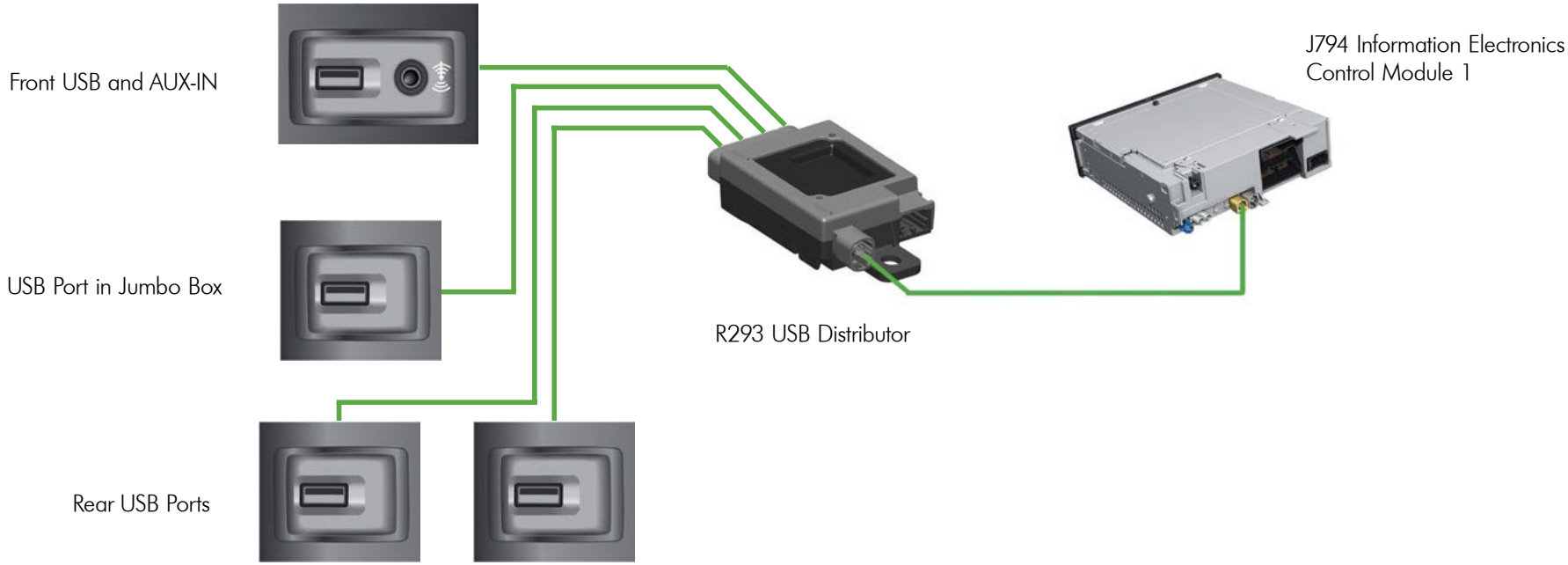

Antenna Configuration

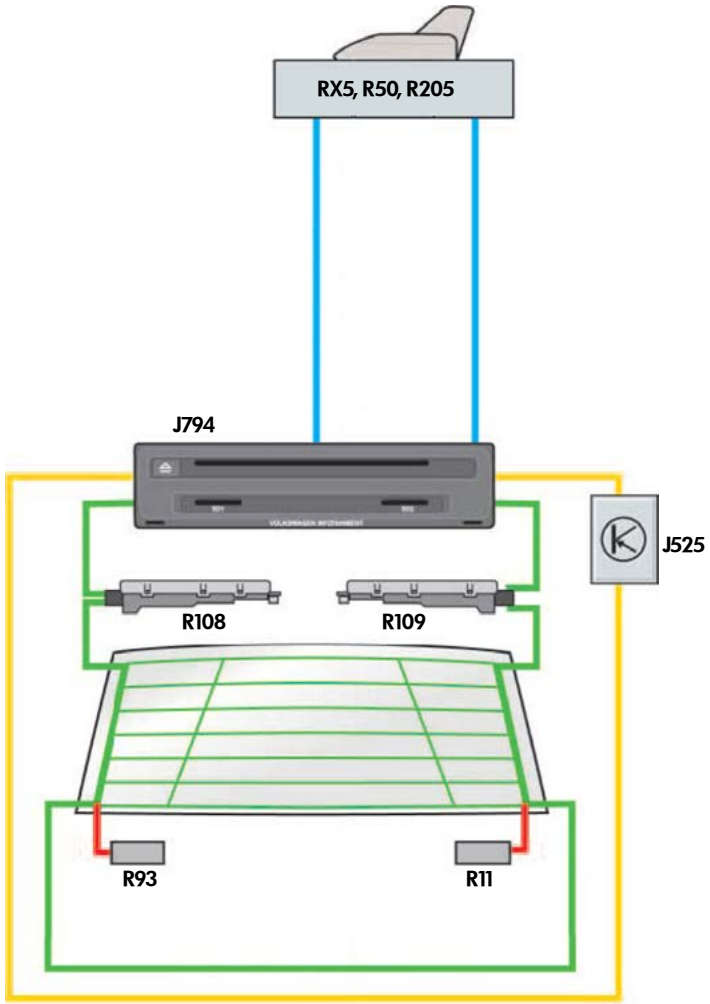

Key

J525	Digital Sound System Control Module
J794	Information Electronics Control Module 1
R50	GPS Antenna
R11	Antenna
R93	Radio Antenna 2
R108	Left Antenna Module
R109	Right Antenna Module
R205	GSM Antenna
RX5	Roof Antenna

Fender Audio

The optional Fender audio system produces a classic Fender sound, best described as:

- Incredible sound clarity at any volume
- Strong bass
- Clear mid-range sound frequencies

The components of the system are:

- Two speakers in each door
- One speaker per side for the third row
- A subwoofer mounted inside of the spare tire
- A center front speaker in the dash
- A 12-channel 400W amplifier under the driver's seat

Media Control

Volkswagen offers a Media Control App that allows for communication between the customer's smartphone or tablet and the infotainment system as an option. With this app, the customer can:

- Play smartphone/tablet content through the stereo speakers
- Operate radio, navigation and sound from anywhere in the vehicle
- Send navigation destinations to the vehicle's navigation system

Tablet Holder

The tablet holder is a device that can be added to many Volkswagen vehicles.

- It has a bracket that attaches to the headrest posts. This bracket has two hooks for grocery bags or other items
- A tablet holder can be attached to and easily removed from the bracket
  - Has a cutout for easy access to Home buttons on many devices
  - Accommodates devices as small as a phone or as large as an iPad Pro in the landscape direction
  - Has been tested in vehicle crash scenarios. Please read all warnings and cautions on the tablet holder for more information

Headrest Bracket with Hooks Extended

Headrest Bracket with Tablet Holder Inserted

Climate Control

The Atlas has both Manual and Climatronic HVAC climate control systems available. Both systems have a second A/C unit for the rear seat occupants.

- The Manual version is a 2-zone system and has separate controls for the front and the rear. This provides two separate temperature zones

Climate Control

- The Climatronic version has three zones; front driver, front passenger and rear passengers
  - The system can be set in Auto or Manual
  - All temperatures can be synchronized using the SYNC function
  - The rear controls can be locked from the infotainment display
  - The heated steering wheel function can be activated using the button in front of the shifter or the infotainment display

Heated and Ventilated Seats

The seat heating and ventilating functions are controlled by separate buttons and can be operated independently or together.

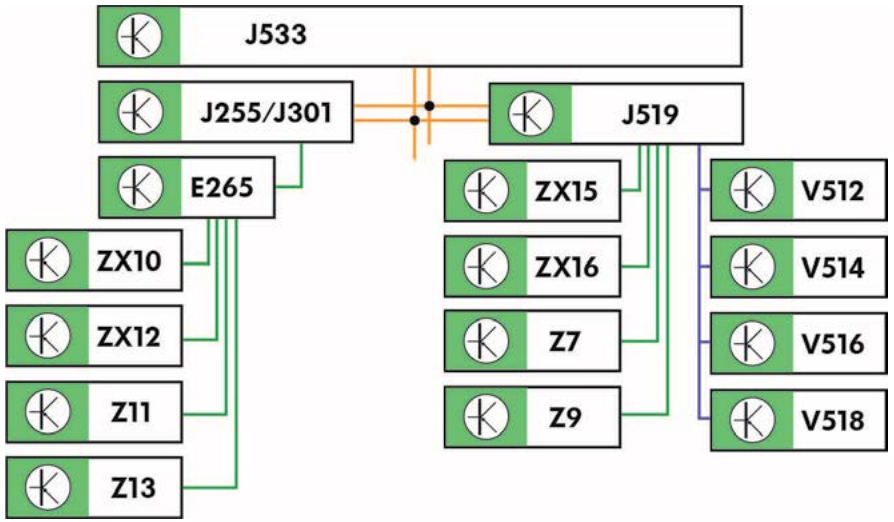

Key

E265	Rear A/C Display Control Head
J255	Climatronic Control Module
J301	A/C Control Module
J519	Vehicle Electrical System Control Module
J533	Data Bus Onboard Diagnostic Interface
V512	Left Front Seat Backrest Fan 1
V514	Left Front Seat Cushion Fan 1
V516	Right Front Seat Backrest Fan 1
V518	Right Front Seat Cushion Fan 1
Z7	Driver Backrest Heating Element
Z9	Front Passenger Backrest Heating Element
Z11	Left Rear Backrest Heating Element
Z13	Right Rear Backrest Heating Element
ZX10	Left Rear Seat Heater
ZX12	Right Rear Seat Heater
ZX15	Driver Side Heated Seat
ZX16	Front Passenger Side Heated Seat

Rear HVAC

The rear A/C components are located under the center console of the Atlas. In the image below, the center console trim has been removed and some components are called out.

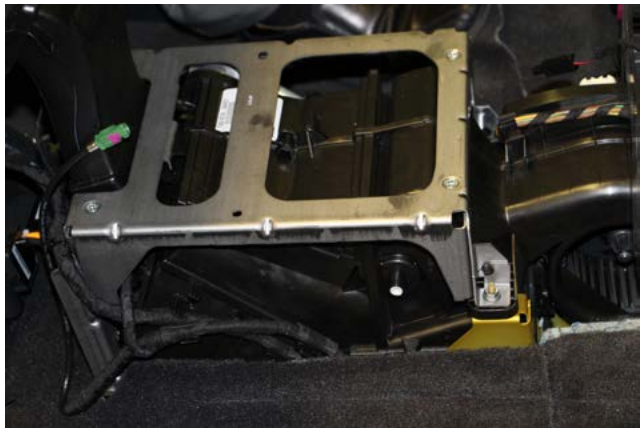

View from Passenger Side with Center Console Removed

View from Driver's Side

The rear expansion valve is accessed from under the vehicle, above the exhaust pipe. A heat shield was removed for this picture.

Under Vehicle with Heat Shields Removed

Knowledge Assessment

An on-line Knowledge Assessment (exam) is available for this Self-Study Program. The Knowledge Assessment may or may not be required for Certification.

You can find this Knowledge Assessment at: **www.vwwebsource.com**

For Assistance, please call: **Volkswagen Academy, Certification Program Headquarters 1-877-791-4838 (8:00 a.m. to 8:00 p.m. EST)**

Or, E-mail: **concierge@volkswagenacademy.com**

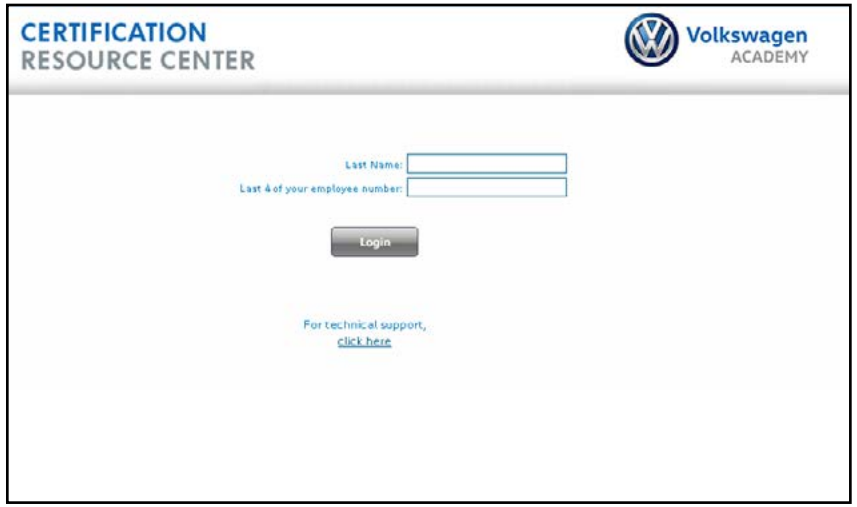

https://www.datarunners.net/vw_crc/default.asp?pageid=home

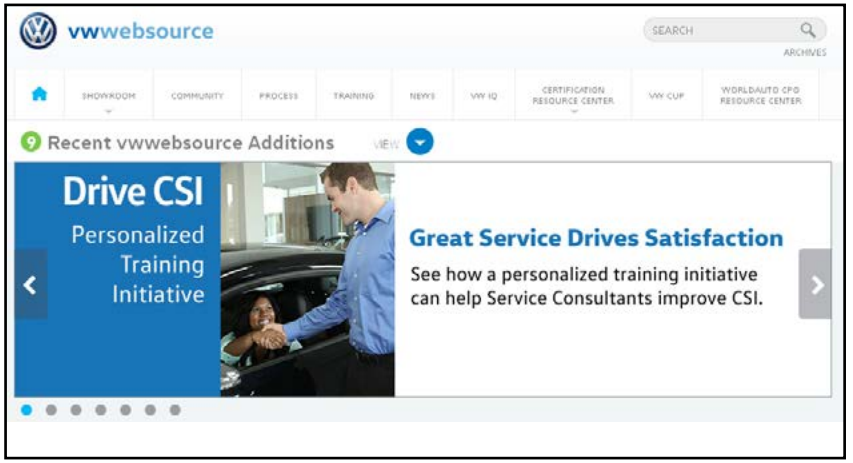

www.vwwebsource.com

Volkswagen Group of America
2200 Ferdinand Porsche Drive
Herndon, VA 20171
February 2017